# In Situ Temperature Measurement Test Report

For

# ASMART LIGHT CO., LTD

## (Brand Name: ASMART)

506 N GARFIELD AVE SUITE#210 ALHAMBRA CA 91801

## Outdoor Pole/Arm-Mounted Area and Roadway Luminaires

## Architectural Flood and Spot Luminaires

Model name(s): AST-S-G12C-150WBT3SA1-abcdef

Remark: "a" can be any two letters to represent lamp colors. "b" represent photocontrol, which can be "3RP", "3NP", "5RP", "5NP", "7RP", "7NP" for Photocontrol type provided or blank for no Photocontrol provided. "c" represent surge protector, can be "10SP", "20SP" for Surge-Protective Device type provided or blank for no Surge-Protective Device provided. "d" can be "DM1","DP1", "DM", "DP" or blank for DC Motion Sensor, DC PIR Sensor provided or not. "e" represent bracket, can be "AM", "DM", "DM1", "YM", "A&DM" and "FM". "f" can be any digits to represent CCT.

Representative (Tested) Model:
AST-S-G12C-150WBT3SA1-abcde30

Model Different: All construction and rating are the same, except CCT

Test & Report By:

Winny Wu

Engineer: Winny Wu

Date: 2022-12-31

Update::2023-03-21

Review By:

Jason Luo

Manager: Jason Luo

Certificate#4810.01

# Table of Contents

1 General . . . . . 3
1.1 Product Information . . . . . 3
1.2 Standards or methods . . . . . 4
1.3 Equipment list . . . . . 4
2 Test conducted and method . . . . . 4
2.1 Ambient Condition . . . . . 4
2.2 Temperature Stabilization . . . . . 4
2.3 Thermocouples . . . . . 4
2.4 Thermocouples contact . . . . . 5
3 Test Results . . . . . 6
3.1 Test Data: . . . . . 6
3.2 Test Photo: . . . . . 6
3.3 Test Data of LED Driver: . . . . . 8
3.4 Test Photo of LED Driver: . . . . . 8

# 1 General

## 1.1 Product Information

| | |
|---|---|
| Brand Name | ASMART |
| Model Number | AST-S-G12C-150WBT3SA1-abcdef |
| Luminaire Type | Outdoor Pole/Arm-Mounted Area and Roadway Luminaires<br>Architectural Flood and Spot Luminaires |
| Nominal Power | 150W |
| Rated Initial Lamp Lumen | -- |
| Declared CCT | 3000K, 3500K, 4000K, 4500K, 5000K, 5700K, 6500K |
| LED Manufacturer | Lumileds Holding B.V. |
| LED Model | L128-XX80RC35003P1 |
| LED Driver Manufacturer | SHENZHEN SOSEN ELECTRONICS CO.,LTD |
| LED Driver Model | SS-160NH-E260BH |
| Sample Receipt Date | 2022-12-10 |
| Sample Number | BLC2212018E3-C1 |
| **Photo** | |
|  |  |

## 1.2 Standards or methods

The following standards are partly or totally used or referenced for test:

| No. | Name |
|---|---|
| **ANSI/UL 1598:2008** | **Luminaires** |

## 1.3 Equipment list

| Equipment ID | Equipment Name | Calibration Date |
|---|---|---|
| BL-009B | Power Meter | 2021-10-09 |
| BL003 | Hybrid Recorder | 2022-11-23 |

# 2 Test conducted and method

## 2.1 Ambient Condition

Test was conducted in an ambient temperature of 25±5℃. Ambient temperature variations above or below 25℃ was subtracted from or added to temperatures recorded at points on the luminaire.
The ambient temperature was measured by a thermocouple which was immersed in 15ml of mineral oil in a glass container.

## 2.2 Temperature Stabilization

Temperatures were measured after they have stabilized when the test has been running for a minimum of 7.5 hours, or the test has been running for a minimum of 3 hours and three successive reading taken at 15 minutes intervals are with 1℃ of another and are not rising.

## 2.3 Thermocouples

Type J thermocouple was used for temperature measurement. The thermocouple was 0.05mm2(30AWG), and complied with the requirements specified in ASTM MNL 12 and limits of error specified in NIST ITS 90 and ISA MC96.1.

## 2.4 Thermocouples contact

Thermocouples were in contact with the TMP LED location described in LM-80 test report. In order to gain the maximum temperature, if appropriate, more than one thermocouple were contact in these locations. For details information, please refer to clause 3.3 for the photo of thermocouple contact.

# 3 Test Results

| Test date | 2022-12-31 | Test Ambient | 25.1 ℃ |
|---|---|---|---|
| Sample No. | | LED Package Model | |
| BLC2212018E3-C1 | | L128-XX80RC35003P1 | |
| LED driver of Each Lamp | Output voltage V | Measured LED working current (Max.) mA | |
| 1 | 219 | 94.4 | |

## 3.1 Test Data:

| Input Vol. | 120.0V | Input Current | 1.232A | Input Wattage | 147.7W | Temperature stabilization time: | 500 min |
|---|---|---|---|---|---|---|---|

| No. | Temperature (°C) | | No. | Temperature (°C) | | No. | Temperature (°C) | |
|---|---|---|---|---|---|---|---|---|
| | Measured | Corrected at 25°C | | Measured | Corrected at 25°C | | Measured | Corrected at 25°C |
| 1 | 67.6 | 67.5 | 2 | 67.2 | 67.1 | -- | -- | -- |
| The highest in-situ measured temperature LED is 67.5°C | | | | | | | | |

## 3.2 Test Photo:

Ts Position:

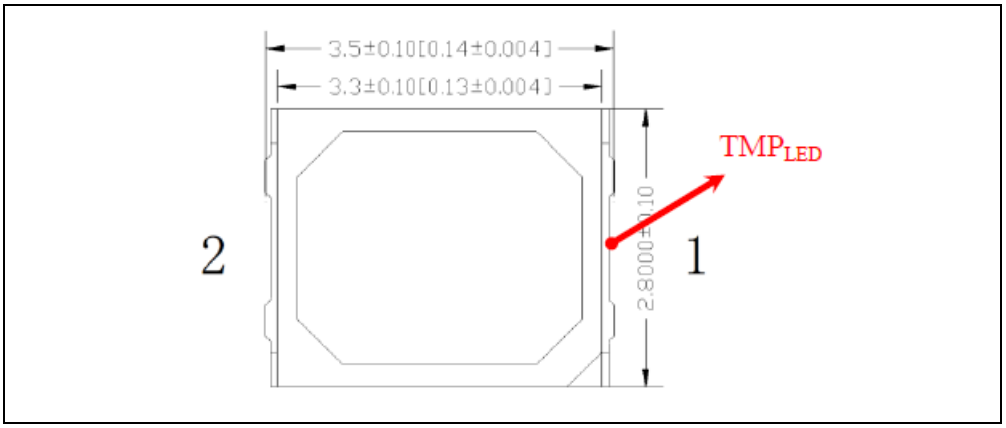

Thermocouple Location on Temperature Measurement Point (TMP):

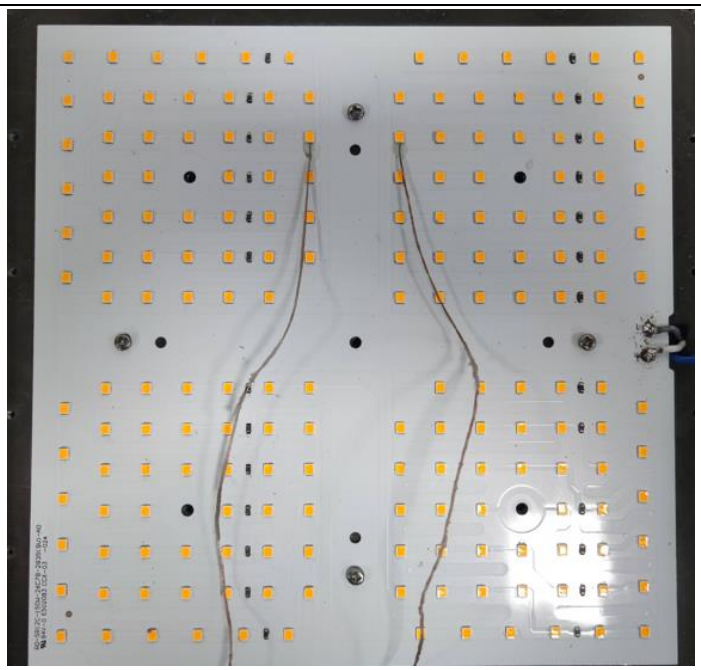



# Results

| | |
|---|---|
| Time (t) at which to estimate lumen maintenance (hours): | 36,000 |
| Lumen maintenance at time (t) (%): | 91.96% |
| Reported L90 (hours): | 45,000 |

## 3.3 Test Data of LED Driver:

| Input Vol. | 120.0V | Input Current | 1.232A | Input Wattage | 147.7W | Temperature stabilization time: | 500 min |
|---|---|---|---|---|---|---|---|

| No | Measured TC Temperature (°C) | | Temperature Limited of Life ⩾ 50000 hours |
|---|---|---|---|
| | Measured | Corrected at 25°C | |
| 1 | 56.9 | 56.8 | 77 |

## 3.4 Test Photo of LED Driver:

Ts Position:

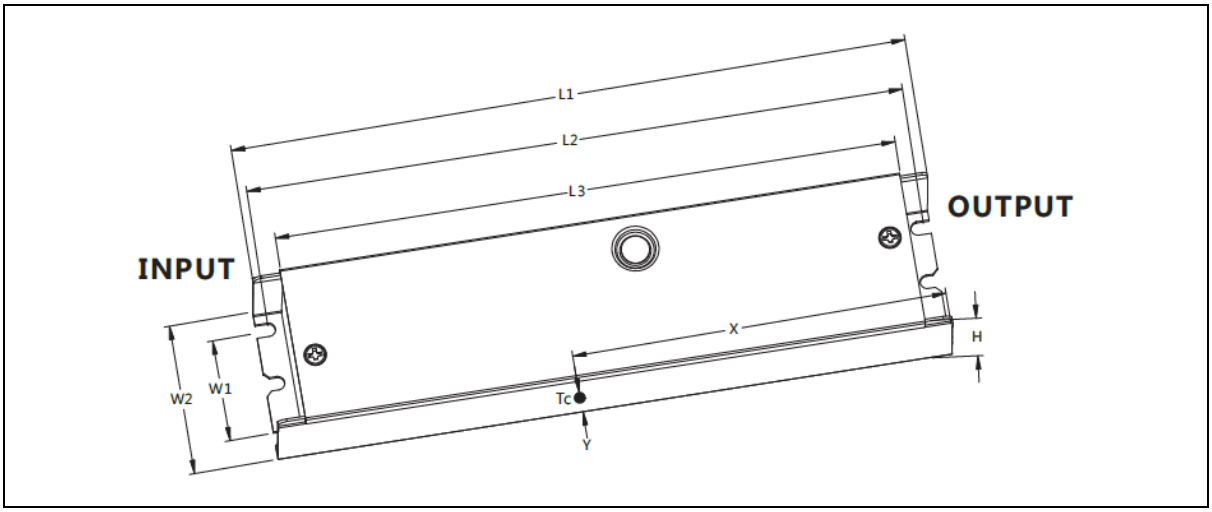


Thermocouple Location on Temperature Measurement Point (TMP):



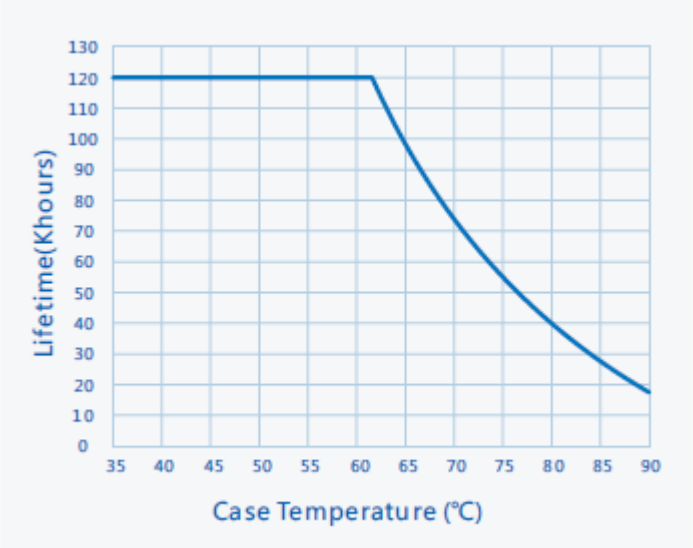


****** END OF THE TEST REPORT******